Damien Sallé, Francesco Cepolina, Philippe Bidaud "Surgery grippers for Minimally Invasive Heart Surgery", in Proc. of IEEE International Conference on Intelligent Manipulation and Grasping IMG 04, Genova, Italy, 1-2 July 2004

Surgery grippers for Minimally Invasive Heart Surgery

Damien Sallé [(1)], Francesco Cepolina [(2)], Philippe Bidaud [(1)]

[(1)] Laboratoire de Robotique de Paris
18, route du Panorama - BP 61 - 92265 Fontenay-aux-Roses Cedex - France

[(2)] Dipartimento di Meccanica e Costruzione delle Macchine
Via All'Opera Pia 15 A - 16145 Genova, Italy

E-mail: salle@robot.jussieu.fr, cepolina@dimec.unige.it, bidaud@robot.jussieu.fr, http://www.cepolina.com

Abstract

From a collaboration between the University of Paris 6 and the University of Genoa a miniature arm for minimally invasive surgery has been designed. The arm, specially suitable for suturing during heart surgery operations, is designed following a modular approach; the apparatus is formed by a sequence of actuation modules carrying, at the end, a surgical instrument. To enhance the system modularity, each module of the arm is provided with independent actuation and control. The paper describes the design of surgery grippers to be used as arm end-effectors. A full scale prototype of the arm will be produced and tested on a surgery theatre by the end of the year 2004.

Keywords

Minimally invasive surgery, active endoscopes, endoscope clamps, surgery grippers, SMA actuated clamps.

1 Introduction

Today research institutes and private companies from USA, Europe, and Japan are developing surgery robotic devices. Minimally invasive surgery (MIS) is an innovative approach that allows to reduce patient trauma, postoperative pain and recovery time. Aiming at MIS, miniaturization, safety and dexterity augmentation are some common topic of research [1], [2], [3]. A miniature arm, remotely guided by a surgeon, carries the surgical instrument and enters trough a small port-access into the patient body. For each minimally invasive operation, an endoscopic camera and from one to three arms are used [2]. Today several surgical operations are accomplished using MIS; we focused our study on the hearth surgery, and more precisely on Coronary Artery Bypass Grafting (CABG). The paper shows some possible designs of grippers than can be used as surgical instruments for suturing. The following chapter offers a brief overview of the proposed laparoscopic arm; the chapter 3 describes in detail some surgical grippers designs.

2 The endoscopic arm

The design of a robotic arm specially suitable for heart surgery operations on an adult patient is considered.

MIS surgery is tremendously demanding for the design of surgical instruments. This operation theatre imposes numerous constraints:
For heart surgery, the instrument is inserted through a trocar, placed between two ribs. The maximal inside diameter of this trocar and thus the maximal outside diameter of the instrument is limited to 10 mm.

Experiments have been carried out by surgeons using sensorized instruments, to record force and position data during a coronary artery suturing procedure. Experimental values are: artery perforation force 0,5N, wire stretching 1N. For this task, a needle is placed in a gripper. From microsurgery literature, gripper force must be larger than 4N to hold correctly the needle [4]. 40N is recurrent value for needle holding force for endoscopic robotic systems [3].

The goal of the instrument adds further constraints to the design: surgery operations require an intuitive control, high precision and accuracy, safety capabilities, reliability and sterilization. During the operation, the tip of the end effector shall reproduce faithfully the surgeon suturing movements, while the wrist should not touch any organ or tissue; arm stiffness and error compensation are the main features able to guarantee accuracy. If, for any reason, the robotic aided operation fails, the surgeon should be able to remove quickly the robot and continue the operation using more classical instruments; fast modules retrieval is then a key feature.

The proposed instrument is modular to allow easy modification of its topology. Following the previous considerations, about 25 modules has been designed; each module has one or two DoF (Figure 1). The arrows show the direction of the actuated DoF.

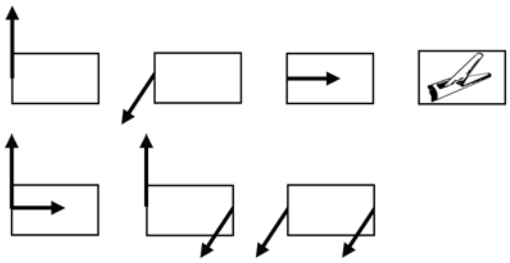

Figure 1. Modules schemes.

Each module has its own characteristics for torque, size and weight. To reduce the weight, the frame of each module is made of thermoplastic Poly-Ether-Ether-Ketone (PEEK). Advantages and drawbacks of each module have been examined.
Once all the mechanical modules are available, it is not trivial to choose which topology or module sequence best fits the task.
An optimisation procedure, based on constrained multiple objective genetic algorithms, has been developed to find the optimal design for a MIS instrument dedicated to Coronary Artery Bypass Grafting [5]. It evaluates candidate instruments, through a highly realistic simulation of the surgical task, using four independent criteria: ability to perform the gesture, instrument dexterity, maximum joint torque and minimal distance to organs.

Figure 2 shows the optimal instrument resulting from the optimisation procedure. The arm is made of four modules: 1 DoF, 2 DoF, 2 DoF modules for motion and a gripper module. A standard interface provides the mechanic, power and signal link between the modules.

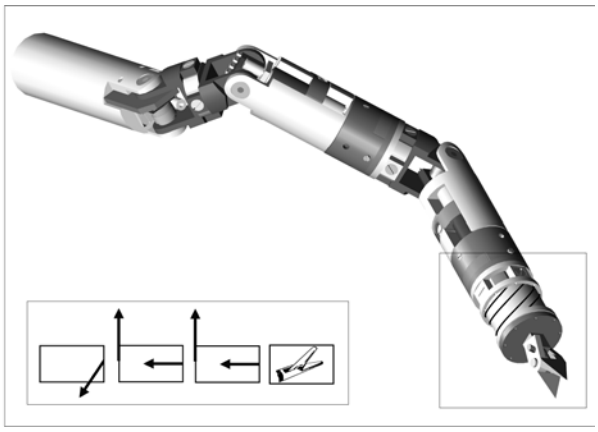

Figure 2. Miniature surgery arm.

The arm has overall 5 DoF plus 1 DoF for the gripper actuation. During the operation, this miniature arm will be driven by a "standard size" 6 DoF robotic arm. Considering that the trocar imposes a 2 DoF constraint on the miniature arm [6], the overall suturing apparatus (standard size arm plus miniature arm), offers overall 9 DoF inside the body plus 1 DoF for the gripper actuation. The 3 DoF redundancy enhances the tool dexterity.
The constrained optimisation procedure ensures that the proposed instrument validates the torque requirements to produce the 0.5N artery perforation force and the 1N wire stretching force. A prototype of this instrument is currently under construction. Experimental validations will be carried out.
The following chapter illustrates a selection of the most representative grippers we have designed.

3 The gripper set

To perform a complete surgery procedure, numerous instruments are needed: scissors, grippers, clamps, knifes etc. Our research is focused on the CABG suturing task, for this reason end effectors designs have been limited to grippers.
The requirements for this gripper are: external diameter of 10mm, a gripping force higher than 4N and close to 40N, an opening angle of at least 45° and a length as short as possible.
Gripper actuation can be performed by cables (powered by actuators located outside the patient body), shape memory alloys (SMA) wires, SMA springs, clutches, miniature motors etc. [7].
In the case of cable based actuation, the cables run trough all the instruments modules; each module hosts a segment of the gripper cables. This solution has been rejected for modularity reasons; if each module is independently actuated, assembly and reliability are improved. As additional drawback, the gripper cable actuation generates forces along the proximal modules; these forces are counter-balanced by the proximal modules frames and actuators. Therefore, depending on the arm stiffness and actuators power, cable actuation can affect the whole arm control.
Miniature electric motors can be easily controlled but have a low power/volume ratio and need gearboxes; the outside diameter of the instrument limits the actuators size and hence the module power.
SMA actuation is easy to actuate, gives an high power/volume ratio but is difficult to control due to the material hysteresis; the actuation bandwidth is limited by the SMA cooling time.
As the gripper should reach only two states - open and closed position - most of the proposed modules are actuated with SMA wires.

Due to the limited available space, none of the gripper modules includes a sensor to control the clamp angle. A rough idea about this measure can be derived measuring the electric resistance of the SMA; anyway, because the full operation is supervised by a laparoscopic camera, the surgeon can retrieve information about the clamp position, directly from the camera's images.

3.1 Motorised gripper

The module (Figure 3) is actuated by a 5mm diameter Faulhaber motor coupled with an harmonic drive 1:500 gearbox – Micromotion GmbH company – (part 2). The gripper frame (part 1) is fixed on the gearbox. The gripper arms, powered by a worm and gear transmission (part 3 and 4), are optimised to supply the highest couple; each arm lever (part 5) is 10mm long. The module provides more than 50N of gripping force; the gripper (part 6), has an opening spam of 56°. The main drawback of the module is its length (37 mm) that drastically limits the length available for the other modules used for motion. Therefore the gripper length limits the instrument's manipulability.

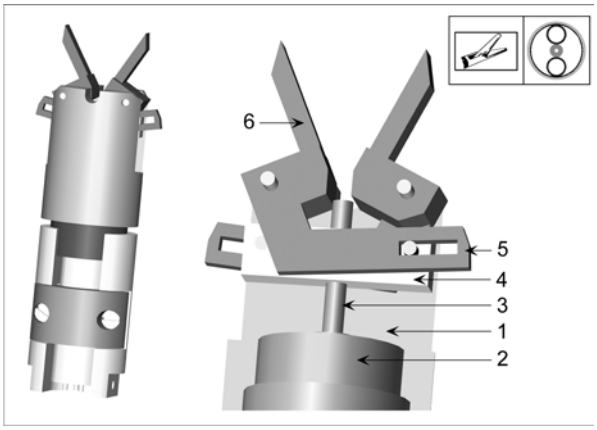

Figure 3. Motorised gripper.

3.2 SMA Grippers

The design of the motorised gripper has shown that electric motors are too long to be used in grippers. Several grippers have though been developed using SMA wires for actuation. Their typical recovery strain is 4%.

3.2.1 SMA Grippers Mechanical Actuation

Shape memory alloys can be made in a lot of various shapes: wires, springs, cylinders… etc. However as cooling time is the key parameter for the design of SMA actuated mechanisms, cylinders can not be used. SMA springs are used for traction but are long and have medium power. Torsion springs produce very low torque. So SMA wires seems to be the best solution for the design of a surgical gripper.

When heated by electric current, the SMA material shifts to austenite state and, thanks to the memory effect, the wire shortens. As response time is driven by the wire temperature, the time necessary to cool the wire under natural convection is the main problem. Cooling time under natural convection is directly related to the exchange surface area between the wire and air. To speed up the actuation, this surface should be increased. A solution for that is to replace a single big diameter SMA wire by several small diameter wires placed in parallel and electrically connected in series. They will hold the same force but cools faster.
Eight SMA wires are thus used for the proposed gripper actuation. Their shortening produces either a displacement or a force. When the current is stopped, the wire temperature decreases and the SMA material shifts back to martensite phase, while the wire's length is unchanged. A force must be applied to pull the wire back to its original length. This force is usually produced by a compression spring. The combination of SMA wires and a compression spring defines a linear actuator.

To open and close the gripper, this available translation must be converted into rotation. This is achieved in the proposed design, shown figure 5, by pins (part 1) that translate into oblong holes (part 2) .

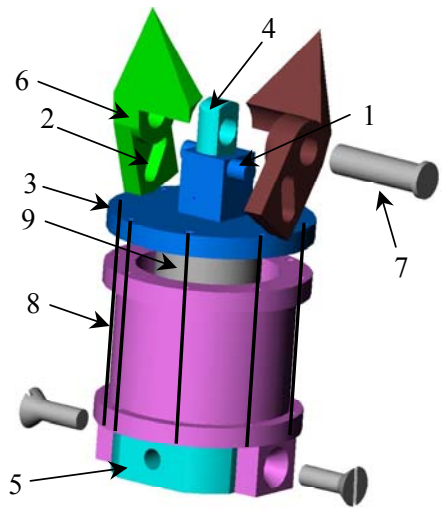

Figure 4. Actuator assembly

The SMA based linear actuator produces a translation of the motion disk (part 3) on a guiding shaft (part 4) fixed to the module's frame (part 5). A spring (part 9) generates a force opposite to the SMA wires (part 8). Two asymmetric pins (part 1) are mounted on the motion disk. The gripper jaws (part 6) rotate with respect to a shaft (part 7) mounted on the motion's disk's guiding shaft. They are though rotating with respect to the module frame.
This mechanism transforms the translation of the motion disk into a translation of the pins in the oblong holes. This motions results in the rotation of the gripper jaws with respect to their axial shaft and thus the opening-closing motion of the gripper.

The actuation principle is shown on figure 5: when the wires are heated, the disk moves on the left and the gripper opens. When the wires are cooling, the disk moves to the right and closes the gripper. When the wires are totally cold, the gripper is closed. As the spring is pre-tensioned, it still exerts a force on the motion's disk. This force is propagated through the jaws to the needles, allowing to firmly hold it.

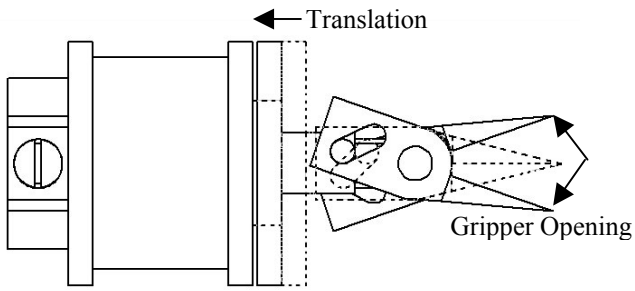

Figure 5. Gripper opening-closure principle

As during most of the surgical procedure, the clamp is closed, the SMA wires are heated only during a very short time.

In case of failure of the robotic arm, the surgeon extracts the tool and terminates the operation using classic instruments. If the four SMA wires are broken, the spring pushes the clamp in the closed position leaving the suturing niddle secured to the clamp. This effect is positive, because the clamp, in the closed position, doesn't offer resistance while it passes trough the trocar.

3.2.2 Optimal design of the gripper

The design of this gripper must satisfy multiple criteria: it must minimize the overall length, produce a high clamping force, allow large opening of the gripper and should host 8 small SMA wires to allow fast response.

The following parameters, illustrated figure 6, must be set to design the gripper jaws:

ΔX – Translation range of the motion's disk.

Δh – Vertical distance between the pin's position in opened and closed position.

X_{axis} – Distance between the pins and the rotation axis in closed position.

X_{needle} : Distance between the needle and the rotation axis, in closed position.

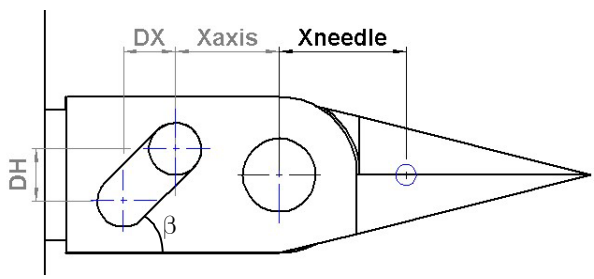

Figure 6. Gripper jaws parameters

Opening range (θ_{ouv}) and holding force (F_{hold}) are directly related to these parameters trough the following equations:

$$\theta_{ouv} = 4\arctan\left(\frac{\Delta h}{2(X_{axis}+\Delta X)}\right);$$

$$F_{hold} = \frac{F_{prec}.\Delta h}{2X_{needle}};$$

So to get maximum opening range and holding force, Dh must be maximized and Xaxis, DX and Xneedle minimized.

However, to ensure good motion transmission, DH and DX must be related:

$$\Delta h = \alpha \Delta X$$

The angle made between the oblong hole and the gripper is calculated as:

$$\beta = \arctan\left(\frac{\Delta h}{\Delta X}\right)$$

If α is big, then β is big and the oblong hole is almost vertical, meaning that very fast opening but low accuracy occur.

If α is small, then β is small, and the opposite will happen: very slow opening with good accuracy.

SMA wires of 250 microns diameters are used. 375 microns could only be used only for the parallel SMA gripper, as their bending radius is large.

The maximum stress of the wires is set by the provider to be 400 Mpa. The maximum pulling force to be applied on the disk is calculated by the following equation:

$$F_{\max} = 8.\frac{\pi d^2 \sigma_{\max}}{4} = 157N;$$

and as $F_{\max} = F_{prec} + F_{\Delta X} = K.(\Delta Xprec + \Delta X);$

$$\Delta Xprec + \Delta X = \frac{F_{\max}}{K};$$

The chosen spring has the following characteristics: outside diameter: 5.2mm, wire diameter: 1mm, zero load length: 9.5mm and stiffness K=108N/mm.

The maximal compression of the spring is though:

$$\Delta Xprec + \Delta X = 1.454mm;$$

Opening angle and holding force can be re-written as:

$$\theta_{ouv} = 4\arctan\left(\frac{\alpha \Delta X}{2(X_{axis}+\Delta X)}\right);$$

$$F_{hold} = \frac{\alpha K \Delta X(1.454-\Delta X)}{2X_{needle}};$$

So the design of the gripper resumes to the choice of $\alpha, \Delta X, X_{axis}$ and X_{needle} to maximize θ_{ouv} and F_{hold}.

It clearly appears that X_{axis} and X_{needle} must be minimized. They are set respectively to 2mm and 4mm, to account for mechanical constraints and minimal distance needed to finely manipulate the needle.

Figure 7 shows the evolution of the needle holding force with respect to ΔX for 3 values of α:

α = 1 → β = 45°; α = 2 → β = 63°; α = 3 → β = 72°

It clearly appears that F_{hold} reaches a maximum for $\Delta X = 0.72mm$.

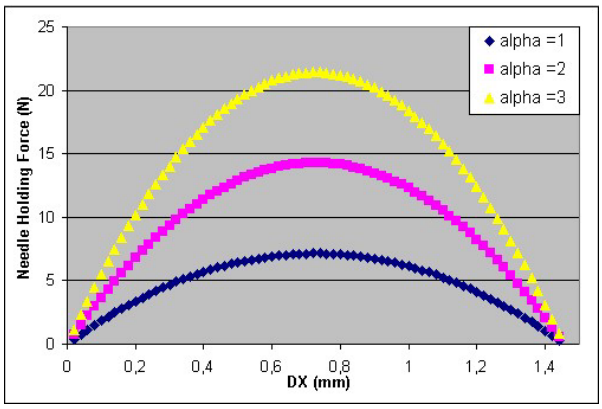

Figure 7. Needle holding force vs Displacement.

Figure 8: shows the evolution of the needle holding force with respect to θ_{ouv} for the same values of α and when ΔX increases. Each maximum of the curves is reached for $\Delta X = 0.72mm$. It also shows that the higher α is, the higher the holding force and the opening angle are.
Again, high values of α must be balanced by low accuracy in the motion transmission.

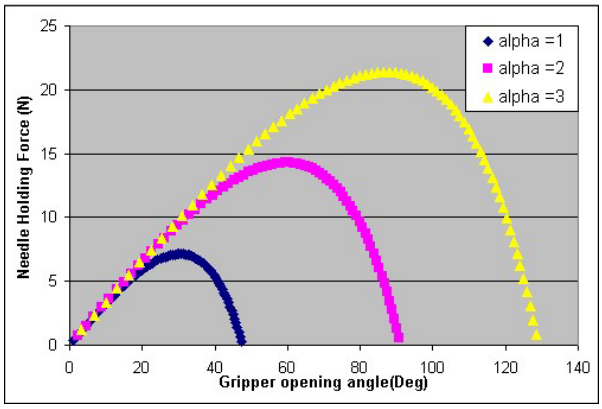

Figure 8. Needle holding force Opening angle.

According to these considerations, the final design parameters for the gripper are set as:

$\Delta X_{preconstrained}$	= 0.73 mm;
$\Delta X_{\max}$	= 0.72 mm;
Δh	= 2 $\Delta X_{\max}$ =1.42 mm;
X_{axis}	= 2 mm;
X_{needle}	= 4 mm;
K	= 108 N/mm;
Wire diameter	= 0,250 mm;
θ_{ouv}	= 60 degrees;
F_{hold}	= 15 N;

To achieve the desired translation, the SMA wires must shrink by at least 0.72mm. After a few cycles, the recovery strain of the wires is about 4%. As a security factor, the SMA wires length is calculated to produce a 1mm translation. To achieve this 1 mm translation under the 4% strain constraint, each wire must be at least 25mm long.

Different SMA wires configurations are proposed in the following sections to produce this translation and to actuate the clamp.

3.2.3 Parallel SMA gripper

This is a stand alone module (Figure 9). The eight SMA wires (part 5), placed along the external surface of the module (part 6 and 7), provide the actuation.

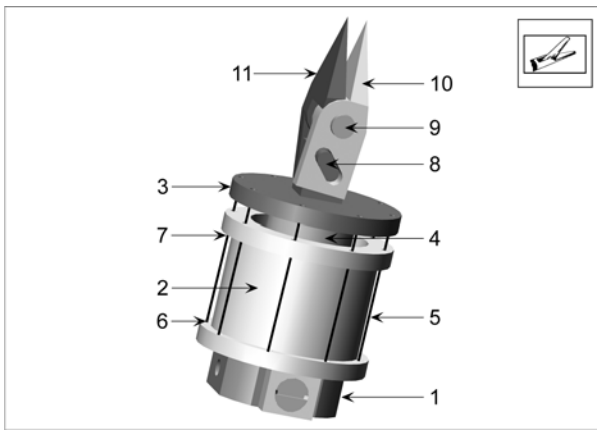

Figure 9. Parallel SMA gripper.

This configuration allows perfect transmission of motion and forces between the wires and the motion disk (part 3).
However, the module must be long enough to include all the wires, meaning that the length of the actuation subset (parts 2 to 7) must be at least 25mm, leading to an overall length for this module of 37mm.
The parallel SMA gripper has though the same length than the motorized module but has lower bandwidth and holding force.

3.2.4 SMA Gripper with self rotation

The last module used to actuate the proposed MIS instrument is a self-rotation module.
One possibility to reduce the overall length of the last two modules of the MIS instrument is to combine them: the module (Figure 10) has 2 DoF: self-rotation and gripper. Combining a 2DoF actuation module and a parallel gripper is not feasible due to size limitations in the module's diameter.

For the proposed SMA gripper with self rotation, an electric motor, located in the lower part of the module, provides the self rotation motion, while eight SMA wires running along the external part of the module, actuate the gripper (part 5) as for the parallel SMA gripper. The positioning and fastening of the wires along the external surface is not easy.
Small modifications of the previous actuation design must be made to merge the two modules:
The frame of the module is made of two elements linked by two screws; the first element (part 1) is

placed around the motor, the second (part 2) sustains the gripper's jaws rotation axis (parts 6,7 and 8). The SMA wires are fastened to the motion disk (parts 3,4).

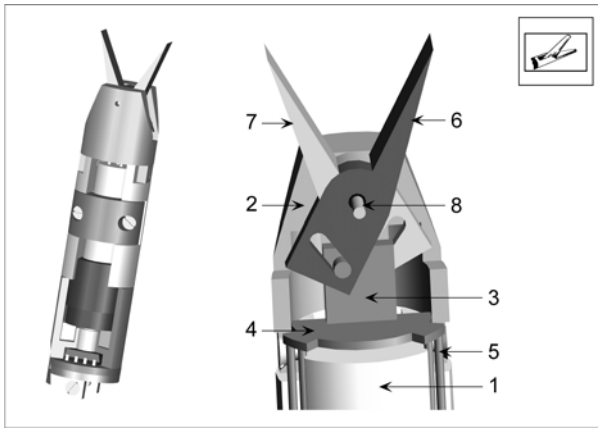

Figure 10. Gripper with wrist.

A spring (not shown in the figure) provides the clamp closure.
The gripper with self rotation is quite compact but presents some drawbacks: machining and fastening are complex; the overall length of the module, while reduced in comparison to the use of two separate modules with a parallel SMA gripper, is still important and not compatible with heart surgery. Moreover, as a wrist actuation and a gripper actuation are placed in the same module, in case of failure of any of them, it would be necessary to replace the whole module.

3.2.5 Net SMA gripper

To reduce the size of the gripper module, the only solution seems to place the 25cm wires in such configurations that the overall length of the module is minimized.

The net SMA gripper is the first proposed gripper using this idea: the mechanical actuation principle for this gripper (Figure 11) is similar to the design detailed in section 3.2.1.

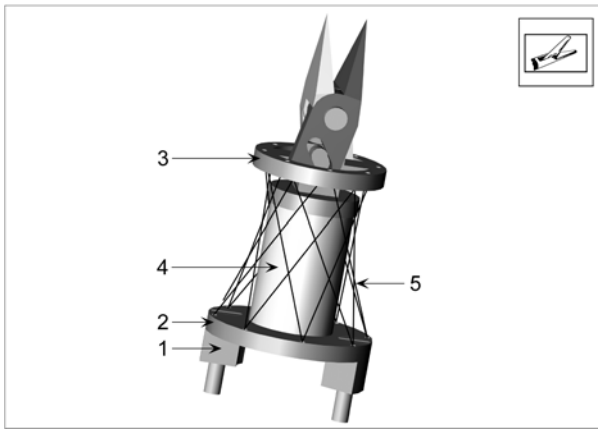

Figure 11. Net SMA gripper.

However in this configuration, the SMA wires are placed like in a net (part 5): they are not parallel to the module's frame but their insertion holes are shifted by two positions. To even reduce the length of the module while maintaining the length of the wires, the fastening diameters on part 2 and 3 are different.
Basic trigonometry shows that using this configuration, the module length can be decreased to 21.5 mm.

This wire positioning has a good wire-length/module-length ratio but presents different drawbacks. When contracted, wires are not pulling axially on part 3. However, only the axial component of the wire force is used to generate the translation of the mechanism.
Moreover, to prevent short-circuits to occur when 2 wires overlap, the SMA wires should be covered with a not conductive layer.

3.2.6 Helicoidal SMA gripper

To reduce the gripper's module length even more, the previous idea is pushed to its maximum for the helicoidal SMA gripper:
The helicoidal SMA gripper is the last evolution of this family of grippers (Figure 12). The mechanical actuation is the same as the parallel SMA gripper (Figure 5). The SMA wires (Figure 12, part 5) are placed in an helicoidal way along the external surface of the module frame (part 2). Each wire runs at a fixed distance with respect to the next one; there is no contact between the wires. The final segment of each wire (part 7 and 3), is parallel to the module axis. For clarity reasons, only three SMA wires are illustrated in figure 12; the complete clamp is powered by 8 SMA wires.

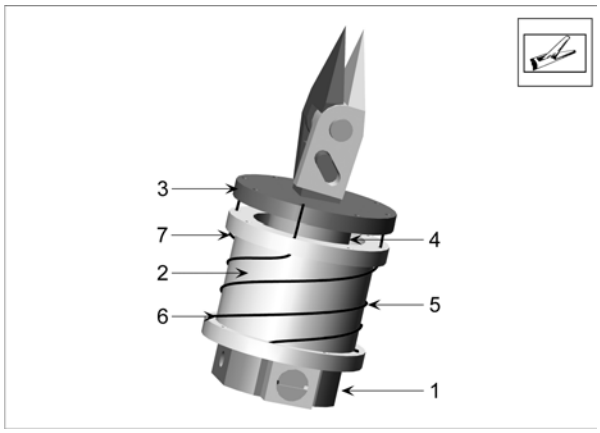

Figure 12. Spiral SMA gripper.

Using the helicoidal property of the wire configuration, its length L is given by:
$L = \sqrt{\pi^2 d^2 + h^2}$, where d and h stand respectively for the helix diameter and height.

As 8 wires are placed on the same frame, the helix angle must be calculated in order to avoid contact

between the wires, so d and h must be related. After calculation and considering a wire of diameter 0.250mm, the following relationship must be verified: $h = 0.65d$, giving an helix angle of 11 degrees.

The minimum frame diameter to get a 25 mm long wire is though given by :

$$d = \frac{L}{\sqrt{\pi^2 + 0.65^2}} = 7.8mm \Rightarrow h = 5.1mm$$

The overall length for the helicoidal SMA gripper would though be 17.1 m.

The only drawback of this design would be friction and tightening between the frame cylinder and the wires, which could reduce the clamping force. Because these effects are complex to model, it is necessary to carry out experiments.
A prototype of the actuation main frame has been developed to validate the helicoidal wire disposition, in terms of force and position.

3.3 Helicoidal SMA gripper prototype

For machining convenience, the frame of the module has been set to: Length: 5.6mm, Wire tightening diameter: 8.7mm (figure 7).
The spring has been pre tensioned by 0.7mm.

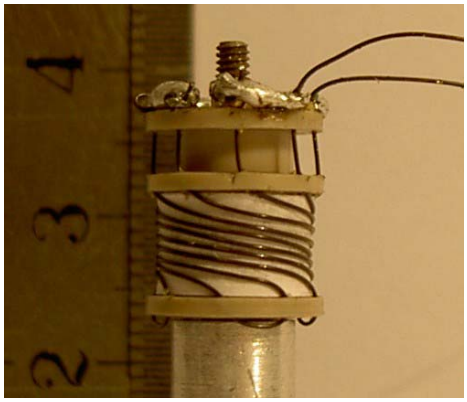

Figure 13. Spiral SMA gripper.

The SMA wires have been electrically connected in series and heated using a 0.8A or 0.9A current during 20 seconds. The resulting displacement is shown on figure 14 and 15 for two trials.

For the first trial (figure 14), at the beginning, the position changes quickly as the motion disk moves down. However after only 8 seconds, the displacement stabilizes to 0.55mm even while the current is maintained.
When the current is stopped, the motion disk remains at this position during 22 seconds before starting moving.

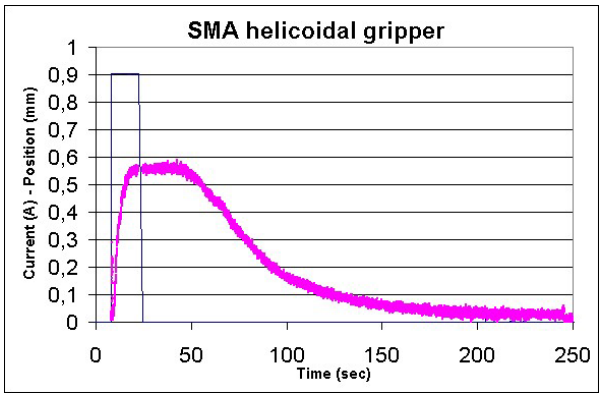

Figure 14: Helicoidal SMA gripper results I

This behaviour corresponds to friction: in the heating phase, the force necessary to move the disk increases as position is increasing. When the available force gets lower to friction, the disk stops.
During the cooling phase, the same behaviour happens: the wire needs some time to cool down and start its phase change. During this time, it is still stiff, keeping high friction. When cooling down, the wires get more elastic and friction is reduced, the disk moves back to its initial position.

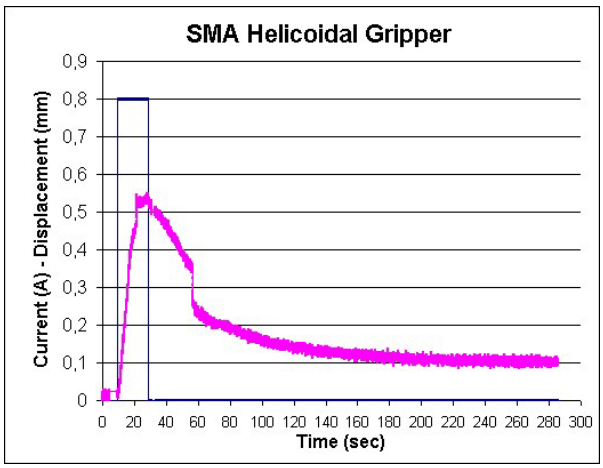

Figure 15: Helicoidal SMA gripper results II

For this second trial (figure 15), the behaviour is slightly different: at time = 21s, the position increase corresponds to the wires overwhelming friction and allowing translation.
The same behaviour is repeated at time = 60s during cooling phase. However, this friction limits the ability of the system to get back to its initial position as it stabilizes at 0.1mm.

These experiments have shown that the desired displacement is not reached, due to friction problems: most of the power generated by the SMA phase transformation is used to tighten the wire around the frame; only a small amount of this power is used to pull on the motion disk.
This is mainly caused by friction between the wire and the frame, and inside the wire, when bent to align with

the motion disk. This friction is even increased when the wire is heated as the tightening force around the frame increases. The overall efficiency of the system shows to be rather low.

To reduce this power loss, the helix angle of the wires should be increased, either by increasing the length of the frame or by stopping the helix at half a turn, or even less.

More experiments are thus necessary to determine the best combination of height, diameter and helix angle for this helicoidal actuation. However, this embodiment allows a great reduction of the size of the gripper.
The proposed MIS instrument though uses the helicoidal SMA gripper as it is compact, lightweight and will satisfy the gripper design criteria.

4 Conclusion

The paper gives a brief description of the constraints that must be satisfied when designing MIS instruments for hearth surgery.
A modular endoscopic arm able to satisfy these constraints has been shortly illustrated; the apparatus has been optimised using constrained multiple objective genetic algorithms.
The detailed design of 5 innovative surgical grippers, has been reported. The grippers are specially suitable to be used as end-effector for MIS laparotomic robotic operations.

The design of surgery grippers is complex; the gripper should be, at the same time, short and powerful; the conclusion of our research is that SMA actuation is the most promising actuation for this kind of devices.

The helicoidal SMA gripper seems to be the best of the proposed gripping devices. Experiments have been carried out to evaluate its innovative actuation solution. The gripping force is satisfying for needle manipulation, but bandwidth and strain need further experiments to be optimized.

The future research activity will be carried on according to the following plan. Once the final gripping device will be machined, assembled and successfully tested, all the other modules that compose the proposed surgical arm will be built.
Finally a prototype of the robotic arm, carrying the helicoidal SMA gripper will be tested in the surgery theatre during an operation on a pig.

References

[1] R. H. Taylor, D. Stoianovici, "Medical Robotics in Computer-Integrated Surgery", *Proceedings* of *IEEE Transactions on Robotics and Automation*, vol. 19 No. 5, 2003, pp. 765-781.

[2] F. Cepolina, R.C.Michelini: “Robots in medicine: a survey of in-body nursing aids. Introductory overview and concept design hints”, 35th Intl. Symposium on Robotics, ISR 2004, Paris, March 23-26, 2004.

[3] M. C. Cavusoglu: "Telesurgery and Surgical Simulation: Design, Modeling, and Evaluation of Haptic Interfaces to Real and Virtual Surgical Environments", *PhD Thesis. University of California, Berkeley, August 23, 2000*.

[4] K. Dong-Soo, W. Ki Young, S. Se Kyong, K. Wan Soo, C. Hyung Suck, "Microsurgical telerobot system", *Proceedings of IEEE/RSJ International Conference on Intelligent Robots and Systems*, 1998, pp. 945-950

[5] D. Sallé, Ph. Bidaud, G. Morel,”Optimal Design of High Dexterity Modular MIS Instrument for Corornary Artery Bypass Grafting”, *Proceedings of the IEEE International Conference on Robotics and Automation – ICRA 2004.*

[6] T. Ortmaier, "Motion Compensation in Minimally Invasive Robotic Surgery", *PhD thesis, Technical University of Munich, 2003*

[7] F. Cepolina, R.C. Michelini: “A family of co-robotic surgical set-ups*”, Intl. J. Industrial Robots, vol. 30, n° 6, Nov. 2003, pp. 564-574, ISSN 0143 991 X.*